EN Instruction booklet

F4L-WINKIT

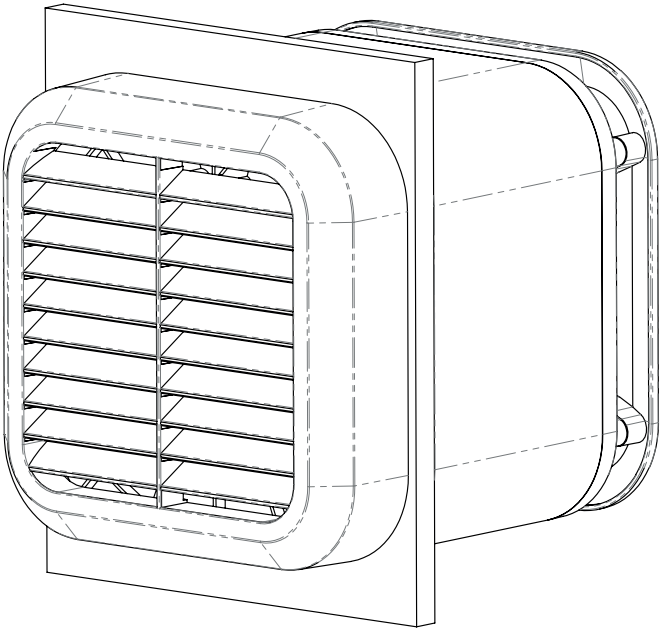

COD. 67.0.000.0154

25/09/2025

Index

1 Product description 3
1.1 Main Features 3
1.2 Instructions for Hole Preparation 3
2 Structure and equipment 4
3 Installation Procedure 5
3.1 Hole Preparation and Selection of Fixing Components 5
3.2 Specifics for the installation of F4L Ø 125 mm 6
3.3 Window Installation F4L Ø 100 mm and F4L Ø 125 mm 7

Read the instructions contained in this booklet carefully before using the appliance. VORTICE cannot assume any responsibility for damage to property or personal injury resulting from failure to abide by the instructions given in this booklet. Following these instructions will ensure a long service life and overall electrical and mechanical reliability. Keep this instruction booklet in a safe place.

1 Product description

F4L-WINKIT (hereinafter “the accessory”) window installation kit, is an accessory specifically designed to allow the installation of ventilation units from the **F4L** series on glass surfaces or glazed panels. This solution is particularly suitable for environments where it is not possible or not convenient to make wall openings, offering a quick, safe, and functional alternative.

1.1 Main Features

- Compatible glass hole diameter: from Ø110 mm to Ø140 mm
- Supported glass unit thickness: between 12 mm & 28 mm.

Note: The glass must be sufficiently thick and strong to support the weight of the product and the mounting kit. Before installation, check that the glass complies with the specifications indicated above.

1.2 Instructions for Hole Preparation

In case the hole is already present, for example when replacing an existing product, it is necessary to ensure that the diameter (D) is between Ø110 mm and Ø140 mm (Fig.**1**). For new installations, to ensure correct device installation, a hole must be made in the glass. Below are the recommended specifications:

- **Model F4L Ø100 mm** ⟶ Vortice recommends making a hole with a diameter of Ø115 mm.
- **Model F4L Ø125 mm** ⟶ Vortice recommends making a hole with a diameter of Ø135 mm.

ATTENTION

- Make sure that the drilling is carried out by qualified personnel, using tools suitable for the type of glass and in compliance with current safety regulations.

1

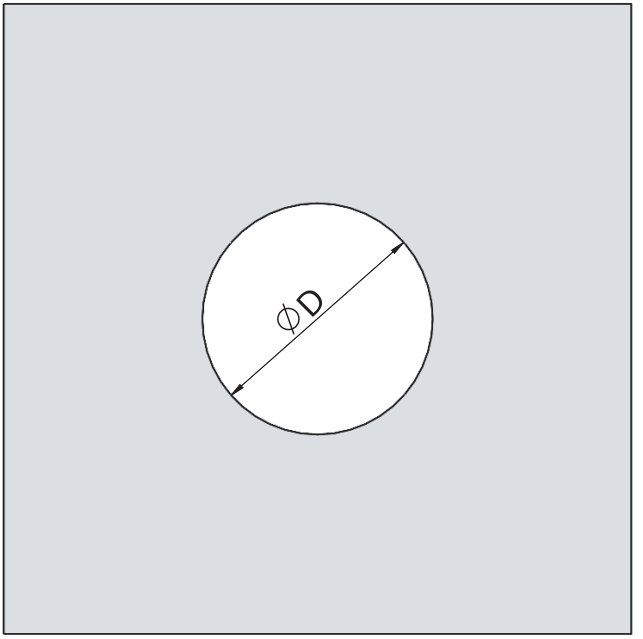

2 Structure and equipment

- External grille (1)
- Internal panel (2)
- External panel (3)
- Fixing Screw Kit (4) contains 2 sets of 4 screws each, differentiated by length to suit different glass unit thicknesses.
- Spacer Kit (5) contains 9 sets of 4 spacers each, with varying lengths to suit different glass unit thicknesses.

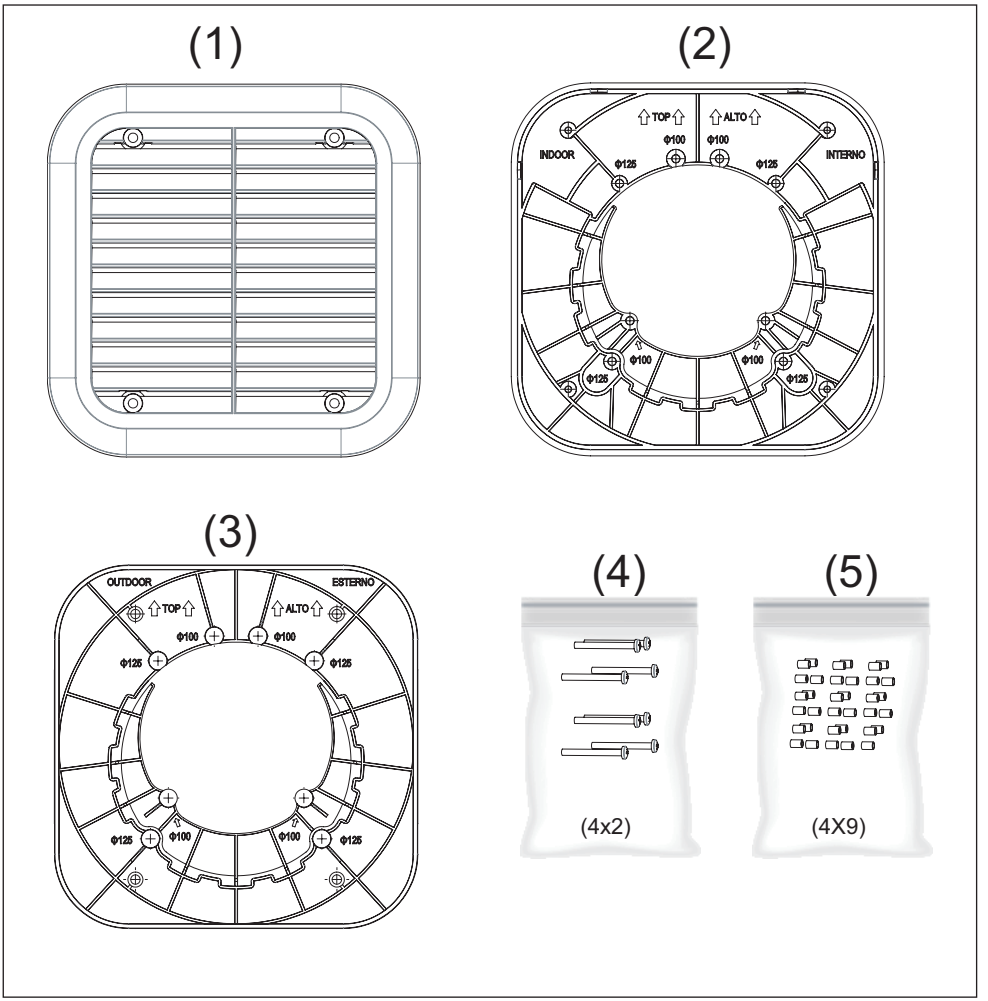

3 Installation Procedure

3.1 Hole Preparation and Selection of Fixing Components

- As a first step, if the hole is not already present, the glass must be drilled according to the specifications provided in the previous instructions (see **paragraph 1.2**).

- After making the appropriate hole, or after verifying that the existing hole meets the required diameter, proceed by measuring the glass unit thickness, and select the 4 appropriate screws and 4 spacers (see table below), included in the supplied bags, using a suitable measuring tool (Fig.**2**).

Note: The following installation images refer to the mounting of the F4L-WINKIT according to the diameter of model F4L Ø100 mm. For the installation of model F4L Ø125 mm, follow the same procedure using the corresponding screws and spacers.

Glass unit thickness (mm)	Screw Length to Be Used (mm) M4 x 40 or M4 x 50	Quantity Screws (pcs)	Spacer Height (mm)	Quantity spacers (pcs)
12÷13	40	4	12	4
14÷15	40	4	14	4
16÷17	40	4	16	4
18÷19	40	4	18	4
20÷21	40	4	20	4
22÷23	50	4	22	4
24÷25	50	4	24	4
26÷27	50	4	26	4
28÷29	50	4	28	4

2

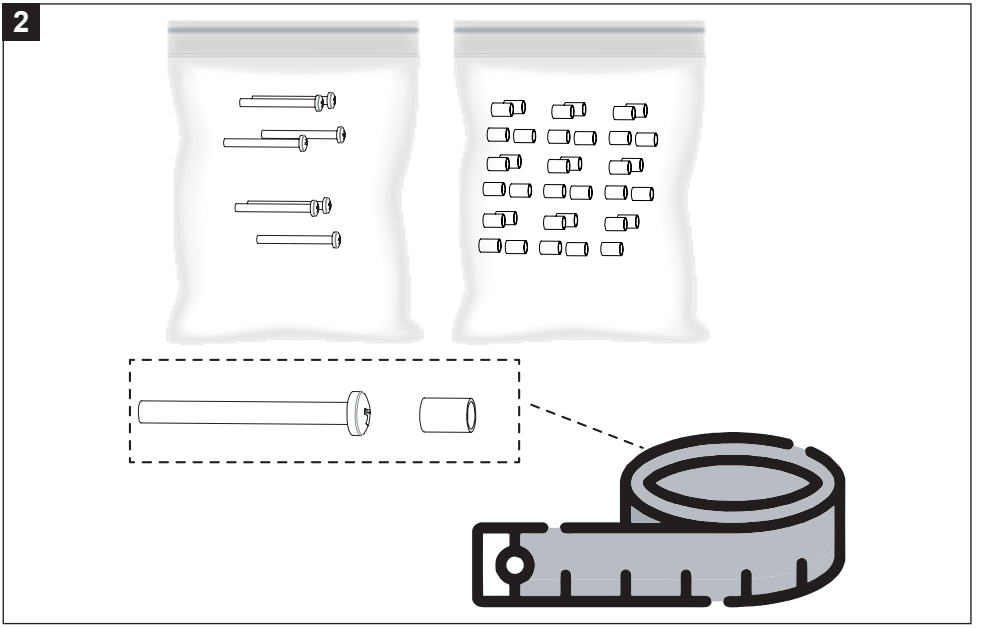

3.2 Specifics for the installation of F4L Ø 125 mm

Note: Skip to the next paragraph if installing model F4L Ø100 mm.

- Exclusively for the F4L Ø125 mm version, it is necessary to use a pair of nippers, or an equivalent tool, to remove the internal part of the component by cutting the dedicated tabs (see circled elements in Fig.**3**) present on both the Indoor and Outdoor panels. Fig.**3** shows the operation to be performed on the internal panel (Indoor); the same operation must also be carried out on the external panel (Outdoor). Once this step is completed, proceed with the installation of the accessory as indicated in the following paragraph.

3

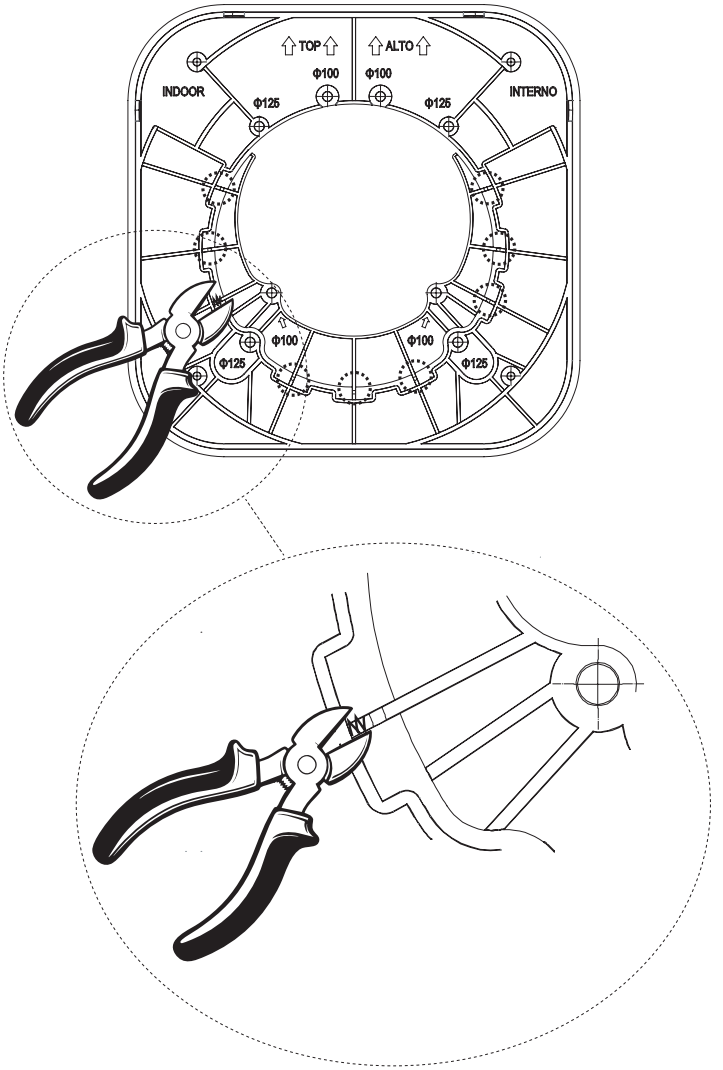

3.3 Window Installation F4L Ø 100 mm and F4L Ø 125 mm

- Proceed by taking the internal panel (Indoor, side facing the interior of the house) and inserting the 4 screws into the holes according to the diameter of the F4L product to be installed: the correct holes to use can be identified by the embossed markings (Fig.**4,** example for installation of F4L Ø 100mm). Then apply the corresponding spacers on the opposite side, ensuring they are correctly inserted onto the screws already positioned (Fig.**5**).

Note: The following installation images refer to the assembly of the F4L-WINKIT according to the diameter of the F4L Ø100 mm model. For the F4L Ø125 mm version, follow the same procedure using the corresponding screw and spacer positions.

ATTENTION

- Do not invert the external panel (Outdoor) with the internal panel (Indoor); correctly position the panel with the top side (TOP) as indicated in Fig.**4**. Refer to the identification markings on each panel to ensure correct placement.

4

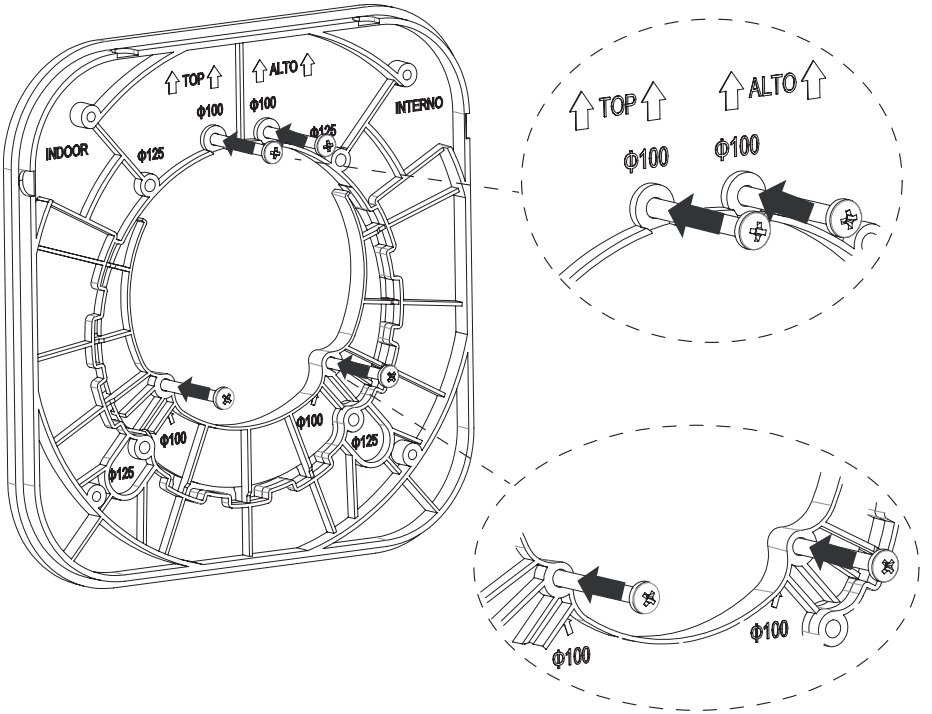

5

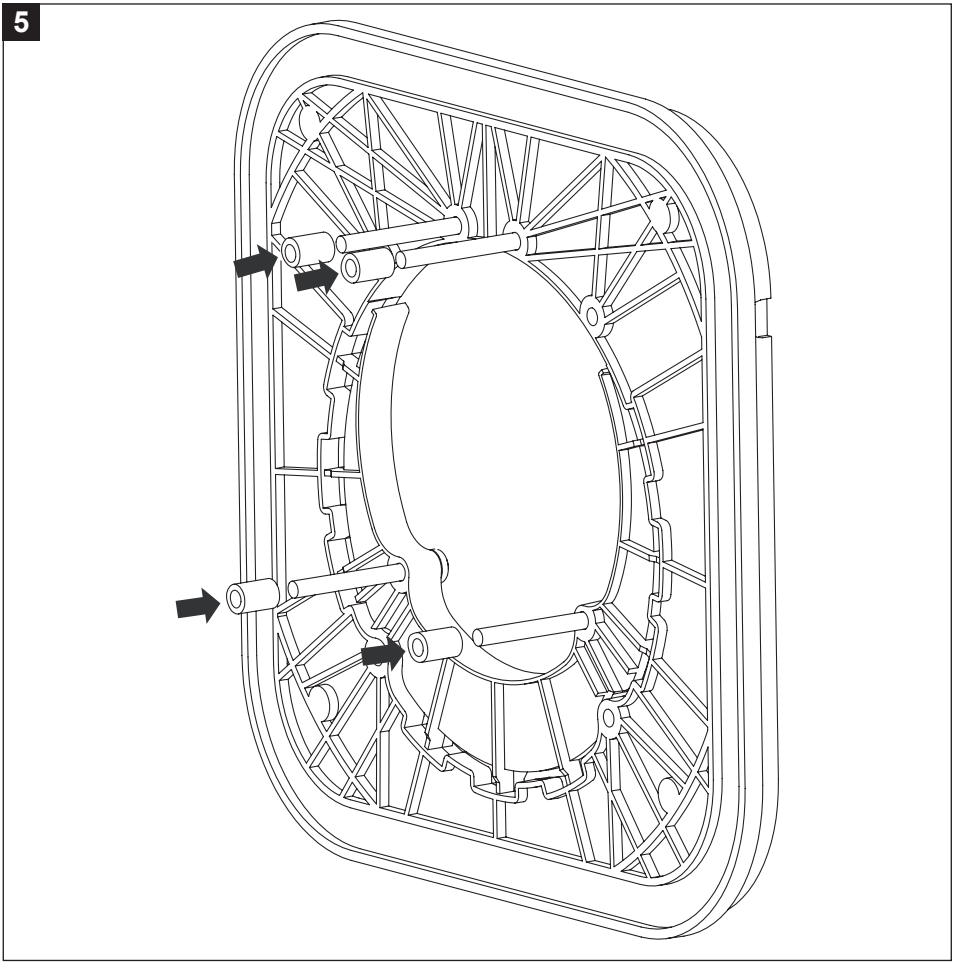

- After preparing the internal panel (Indoor) with the appropriate screws and spacers, take both panels and proceed by positioning the internal one (side facing the indoor environment) and the external one (side facing the outside of the building) in correspondence with the hole made in the glass. Before tightening the fastening components, check the horizontal alignment of the panels using a bubble level. Then proceed with tightening the fastening screws, ensuring that the coupling between the panels is stable and correctly centered within the glass hole (See Fig.**6**).

Note: The pre-mounted rubber gaskets on both panels must be in contact with the glass.

ATTENTION
- Tighten the 4 fastening screws exclusively using a manual screwdriver. DO NOT use electric screwdrivers.

6

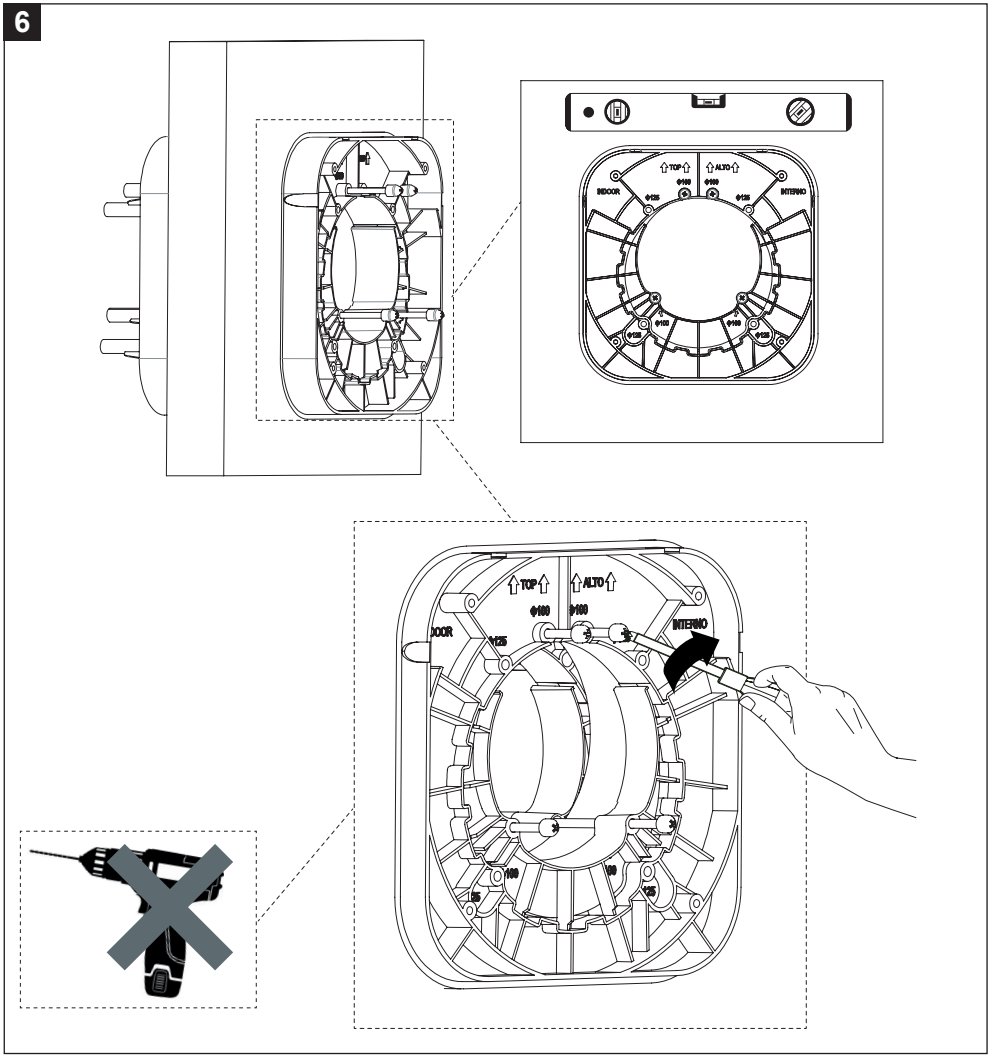

- Proceed with the installation of the F4L product by following the instructions provided in the product installation manual, paragraph 6 – Installation Procedure. In this context, the Winkit serves as the installation wall. Upon completion of the assembly, apply the external grille (Fig.**7**).

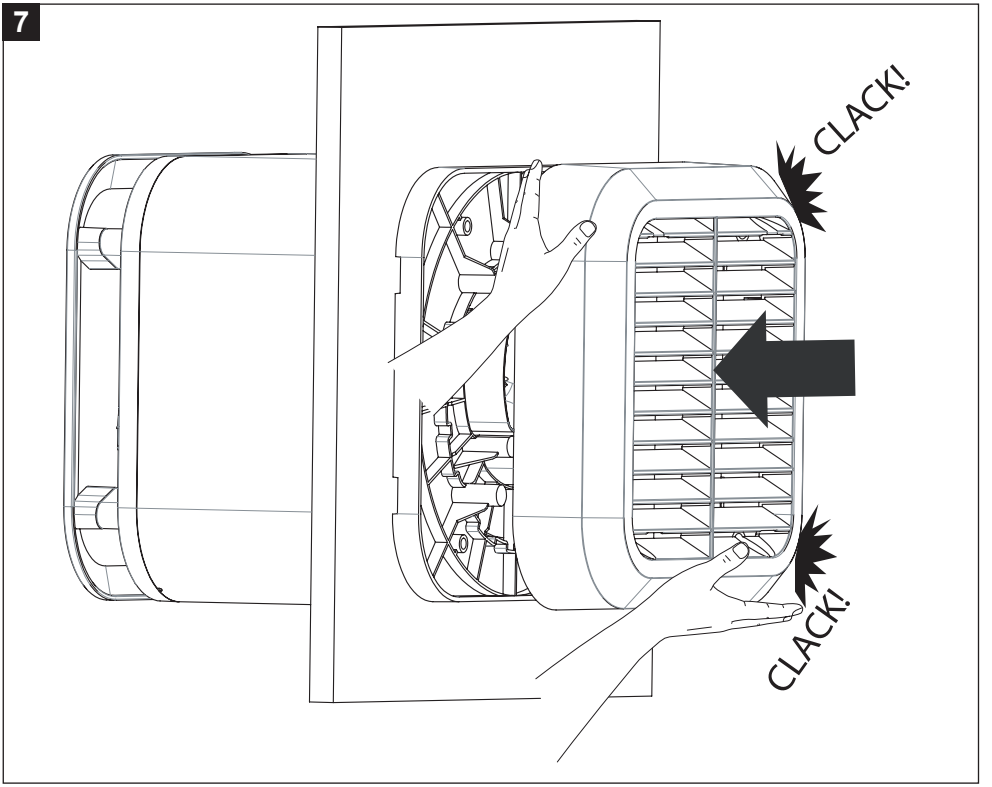

VORTICE S.p.A. si riserva il diritto di apportare tutte le varianti migliorative ai prodotti in corso di vendita.
VORTICE S.p.A. reserves the right to make improvements to products at any time and without prior notice.
VORTICE S.p.A. se réserve le droit d'apporter toutes les variations afin d'améliorer ses produits en cours de commercialisation.
VORTICE S.p.A. behält sich vor, alle eventuellen Verbesserungsänderungen an den Produkten des Verkaufsangebots vorzunehmen.
VORTICE S.p.A. se reserva el derecho a hacer cambios en los productos para su mejora en cualquier momento sin previo aviso.
VORTICE S.p.A. 公司 股份有限公司 保留在产品销售期间进行产品改良的权利。

VORTICE GROUP COMPANIES

VORTICE S.P.A.
Strada Cerca, 2 - Frazione di Zoate
20067 - Tribiano (Milan)
Italy
Tel. (+39) 02-90.69.91
vortice.com
postvendita@vortice-italy.com

BUSINESS UNIT INDUSTRIAL
Via B. Brugnoli, 3
37063 - Isola della Scala
(Verona) Italy
Tel. (+39) 045 6631042
vorticeindustrial.com
info@vorticeindustrial.com

VORTICE LIMITED
Beeches House, Eastern Avenue
Burton on Trent, DE13 0BB
United Kingdom
Tel. (+44) (0)1283 492949
vortice.ltd.uk
sales@vortice.ltd.uk

CASALS VENTILACIÓN AIR INDUSTRIAL S.L.
Ctra. Camprodon, s/n 17860
Sant Joan de les Abadesses
(Girona) Spain
Tel. (+34) 972720150
casals.com
ventilacion@casals.com

VORTICE LATAM S.A.
Bodega #6
Zona Franca Bes Alajuela - Alajuela 20101
Costa Rica
Tel. (+506) 2201 6934
vortice-latam.com
info@vortice-latam.com

VORTICE VENTILATION SYSTEM
(Changzhou) Co. LTD
No.388 West Huanghe Road
Building 19, Changzhou, Post Code: 213000 China
Tel. (+86) 0519 88990150
vortice-china.com
vortice@vortice-china.com